LTB347H

Junction Box

Feature

- Aluminum alloy material with surface spray treatment
- Supports bottom outlet, and side outlet
- Applies to both indoor conditions, and outdoor conditions

Dimension

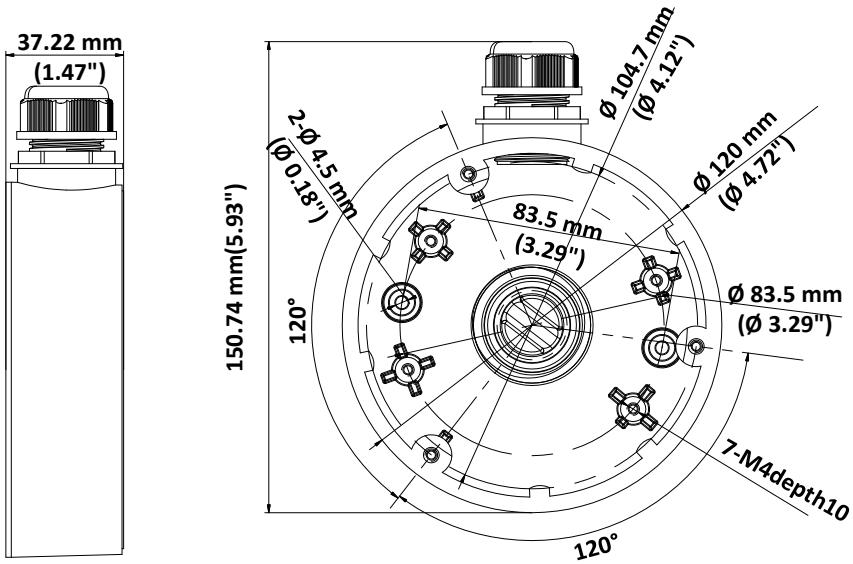

Parameter

Model / Parameters	LTB347H
	Junction Box
Appearance	White
Material	Aluminum Alloy
Dimension	Ø 120 mm × 37.2 mm (Ø 4.72" × 1.46")
Weight	250 g (0.55 lb.)

Note

- The junction box should be installed on the flat surface.
- Waterproof rubber is necessary for the outdoor application.
- The wall must be capable of supporting at least 3 times as much as the total weight of the camera and the junction box.
- The junction box's maximum load capacity is 4.5 kg (9.92 lb.).